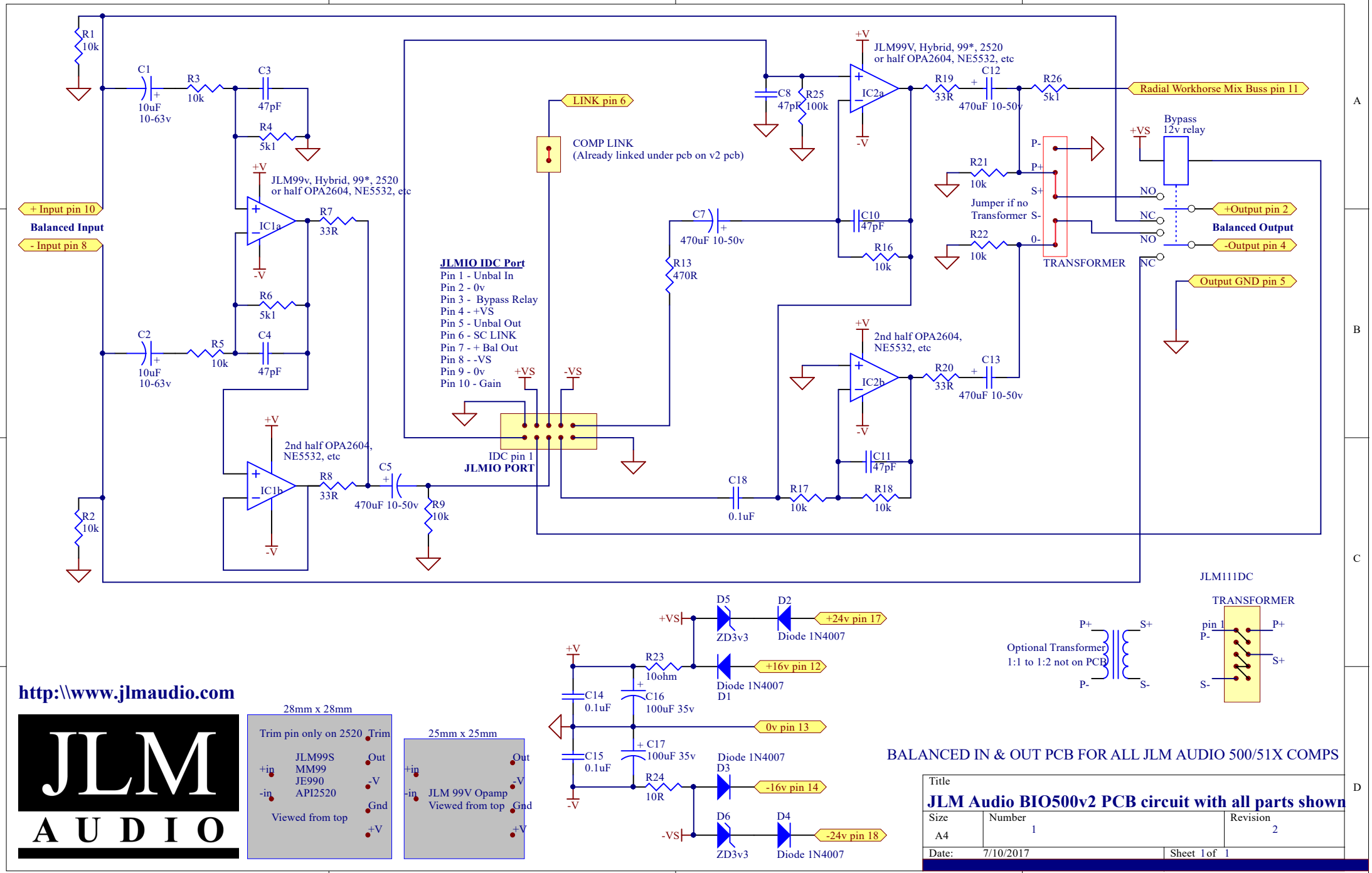
R1 10k
C1 10uF 10-63v
R3 10k
C3 47pF
R4 5k1
+V
JLM99v, Hybrid, 99*, 2520 or half OPA2604, NE5532, etc
IC1a
-V
R7 33R
R6 5k1
C2 10uF 10-63v
R5 10k
C4 47pF
+ Input pin 10
Balanced Input
- Input pin 8
2nd half OPA2604, NE5532, etc
IC1b
R8 33R
C5 470uF 10-50v
R9 10k
R2 10k
LINK pin 6
COMP LINK
(Already linked under pcb on v2 pcb)
JLMIO IDC Port
Pin 1 - Unbal In
Pin 2 - 0v
Pin 3 - Bypass Relay
Pin 4 - +VS
Pin 5 - Unbal Out
Pin 6 - SC LINK
Pin 7 - + Bal Out
Pin 8 - -VS
Pin 9 - 0v
Pin 10 - Gain
+VS
-VS
IDC pin 1
JLMIO PORT
C7 470uF 10-50v
R13 470R
C8 47pF
R25 100k
JLM99V, Hybrid, 99*, 2520 or half OPA2604, NE5532, etc
IC2a
R19 33R
C12 470uF 10-50v
R26 5k1
Radial Workhorse Mix Buss pin 11
C10 47pF
R16 10k
R21 10k
R22 10k
Jumper if no Transformer
P-
P+
S+
S-
0-
TRANSFORMER
Bypass 12v relay
NO
NC
+Output pin 2
Balanced Output
-Output pin 4
Output GND pin 5
2nd half OPA2604, NE5532, etc
IC2b
R20 33R
C13 470uF 10-50v
C11 47pF
C18 0.1uF
R17 10k
R18 10k
D5 ZD3v3
D2 Diode 1N4007
+24v pin 17
R23 10ohm
Diode 1N4007 D1
+16v pin 12
C14 0.1uF
C16 100uF 35v
0v pin 13
C15 0.1uF
C17 100uF 35v
Diode 1N4007 D3
R24 10R
-16v pin 14
D6 ZD3v3
D4 Diode 1N4007
-24v pin 18
JLM111DC
TRANSFORMER
Optional Transformer 1:1 to 1:2 not on PCB
pin 1
http:\\www.jlmaudio.com
JLM AUDIO
28mm x 28mm
Trim pin only on 2520
Trim
JLM99S
MM99
JE990
API2520
+in
-in
Out
-V
Gnd
+V
Viewed from top
25mm x 25mm
JLM 99V Opamp
Viewed from top
BALANCED IN & OUT PCB FOR ALL JLM AUDIO 500/51X COMPS
Title
JLM Audio BIO500v2 PCB circuit with all parts shown
Size A4
Number 1
Revision 2
Date: 7/10/2017
Sheet 1 of 1